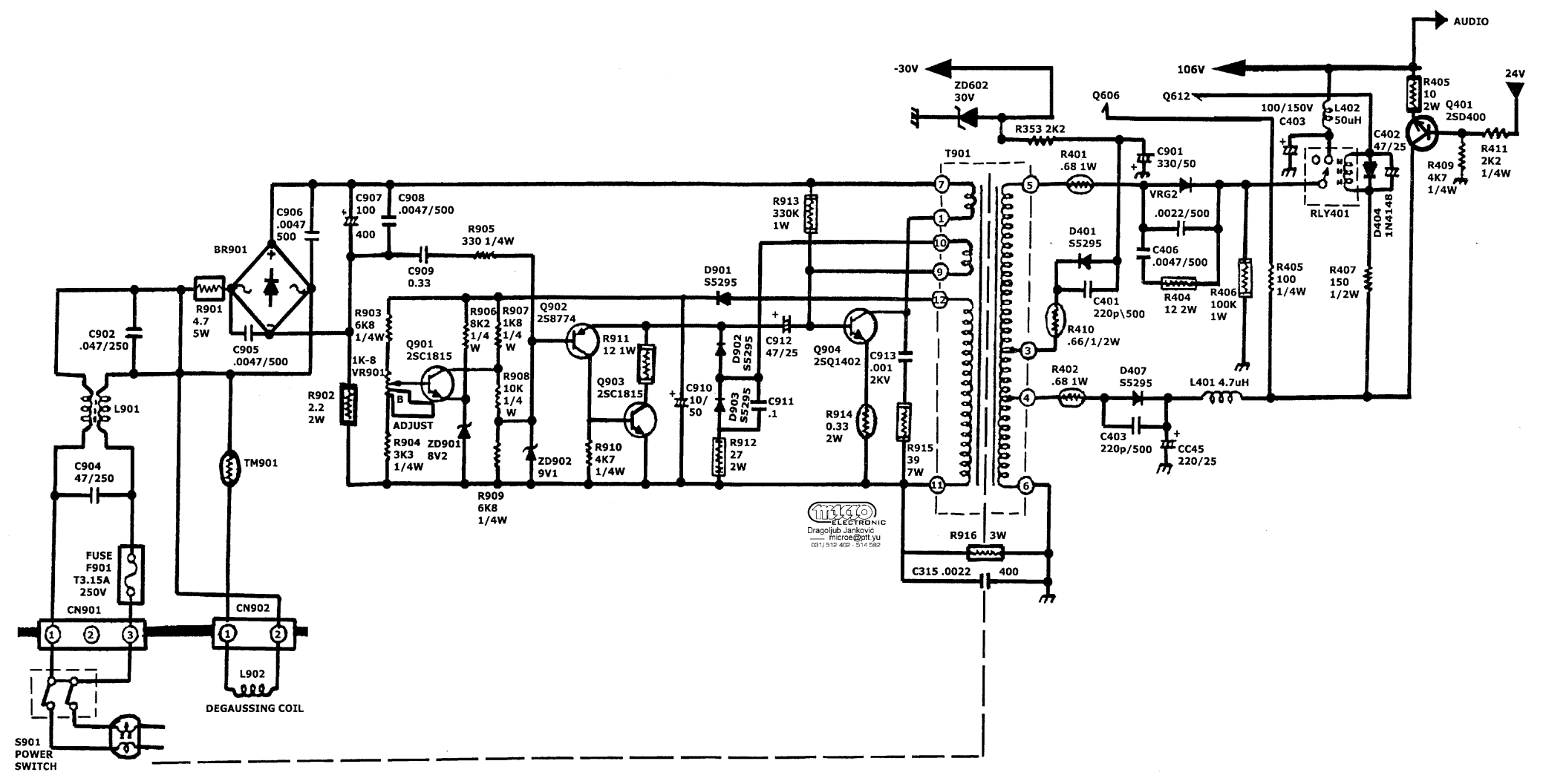
AUDIO
-30V
106V
24V
ZD602
30V
Q606
Q612
100/150V
C403
L402
50uH
R405
10
2W
Q401
2SD400
R411
2K2
1/4W
R409
4K7
1/4W
C402
47/25
R353 2K2
T901
R401
.68 1W
C901
330/50
VRG2
.0022/500
C406
.0047/500
R404
12 2W
R406
100K
1W
R405
100
1/4W
R407
150
1/2W
RLY401
D404
1N4148
D401
S5295
C401
220p\500
R410
.66/1/2W
R402
.68 1W
D407
S5295
L401 4.7uH
C403
220p/500
CC45
220/25
R913
330K
1W
D901
S5295
C912
47/25
Q904
2SQ1402
C913
.001
2KV
R914
0.33
2W
R915
39
7W
R916 3W
C315 .0022
400
D902
S5295
D903
S5295
C911
.1
R912
27
2W
C910
10/
50
Q902
2S8774
R911
12 1W
Q903
2SC1815
R910
4K7
1/4W
ZD902
9V1
R905
330 1/4W
C909
0.33
R906
8K2
1/4
W
R907
1K8
1/4
W
R908
10K
1/4
W
R909
6K8
1/4W
ZD901
8V2
C907
100
400
C908
.0047/500
R903
6K8
1/4W
Q901
2SC1815
1K-8
VR901
ADJUST
R904
3K3
1/4W
R902
2.2
2W
C906
.0047
500
BR901
R901
4.7
5W
C905
.0047/500
C902
.047/250
L901
C904
47/250
TM901
FUSE
F901
T3.15A
250V
CN901
CN902
L902
DEGAUSSING COIL
S901
POWER
SWITCH
micro
ELECTRONIC
Dragoljub Janković
microe@ptt.yu
031/512 402 - 514 592